MOTORS FOR
TANGENTIAL FANS

Model: 3BTM 30-40-4V-0/1

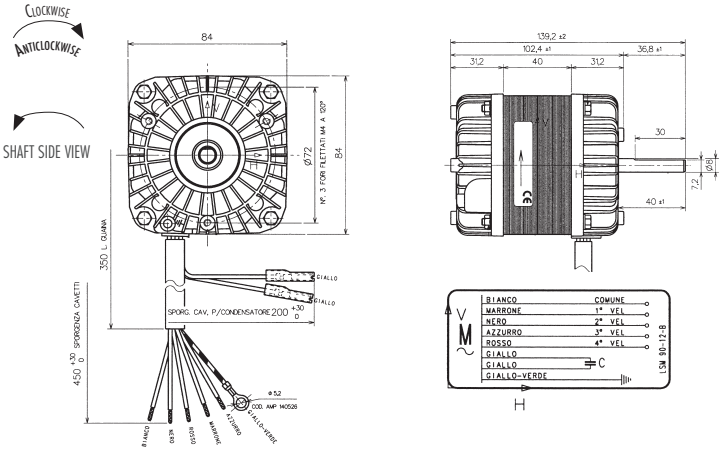

Model	N° shafts	V	A	Hz	W	rpm	µf	CODE	€
CLOCKWISE	1	230	0,36	50	30/80	650/1100	2	**0402047**	**99,00**
ANTICLOCKWISE	1	230					2	**0402044**	**99,00**

UNIVERSAL MOTOR
WITH LONG SHAFT

Ø Shaft 9,54 mm

DIMENSIONS:
- Motor length: 74,55 mm
- Shaft length: 58,80 mm
- Motor width: 82,30 mm
- Fixing hole centres 65 mm

DIR. OF ROTATION	N° SHAFTS	V	A	HZ	W	rpm	µf	CODE	€
CLOCKWISE	1	230	0,4	50	25/85	1100	2	**0402048**	**102,00**