FANS
FOR **COOKER HOODS**

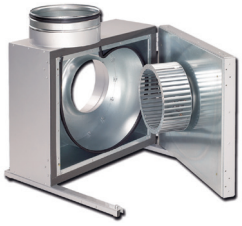

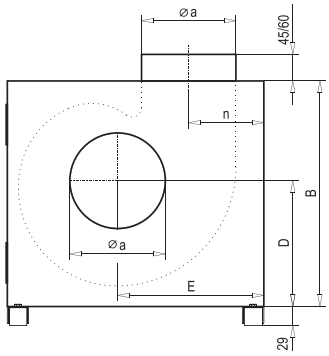

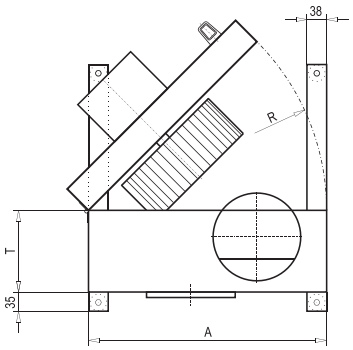

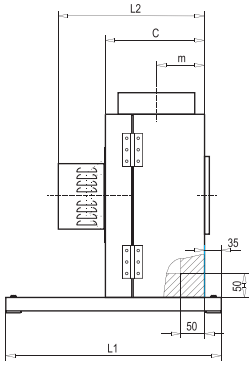

ø CONNECTION CIRCULAR	V	POLES	m³/h*	A	B	C	D	E	L1	R	T	øA	M	N	L2	CODE	€
200	230V	4	1600	470	412	221	230	269	450	470	161	200	106.5	134.4	362	**KBAE200-4**	**1300,00**
200	380V	4	1600													**KBAD200-4**	**1300,00**
180	230V	4	1300	510	445	232	249	292	450	510	174	200	113	142.7	373	**KBAE180-4**	**1433,00**
180	380V	4	1200													**KBAD180-4**	**1433,00**
225	230V	4	2200	522	455	251	256	301	600	522	193	225	122.5	146.5	413	**KBAE225-4**	**1450,00**
225	380V	4	2200													**KBAD225-4**	**1450,00**
250	230V	4	3500	576	500	272	282	333	600	576	213	250	132.5	161.5	461	**KBAE250-4**	**1750,00**
250	380V	4	3600													**KBAD250-4**	**1750,00**
280	230V	4	4400	625	537	291	295	360	600	625	234	280	142.5	171.5	480	**KBAE280-4**	**1860,00**
280	380V	4	4400													**KBAD280-4**	**1860,00**
315	380V	2	4300	690	600	307	339	398	800	690	249	315	153.5	187.5	448	**KBAD315-2**	**1750,00**
315	230V	4	2100												496	**KBAE315-4**	**1750,00**
315	380V	4	2100												496	**KBAD315-4**	**1750,00**
355	380V	2	6000	770	655	331	372	451	800	770	273	355	162.5	206.5	472	**KBAD355-2**	**1990,00**
355	230V	4	3000												520	**KBAE355-4**	**1990,00**
355	380V	4	3000												520	**KBAD355-4**	**1990,00**
400	230V	4	3400	770	655	331	372	451	800	770	273	355	162.5	206.5	520	**KBAE400-4**	**2150,00**
400	380V	4	3400												492	**KBAD400-4**	**2150,00**

* with clear discharge

APPLICATIONS
These ventilating boxes are designed to handle low or medium flow rates, and can be used wherever dirty air, saturated with grease or fluids and heated up to 100°C has to be extracted. Typical fields of use include canteens and industrial kitchens,

CONSTRUCTION CHARACTERISTICS:
The double clad guard is made of painted galvanised steel plating, lined in the inside with condensate-resistant, fireproof, and soundproof rock wool. The ventilation unit allows extremely simple access to all the components, guaranteeing quick, efficient cleaning of all parts of the ventilation unit. The motors are Rosenberg external rotor type with protection level IP54.